Direct Coupling of Parallel Hybrid Propulsive System and Vehicle-Level Integrated Mission Performance Aircraft Sizing Models

Aleksandar Joksimović (1), Alberto Lourenco-Feio (1), Anna Occhipinti (2), Javier Domínguez Sanchez (3)
1: ISAE-SUPAERO, Université de Toulouse, France (correspondence: aleksandar.joksimovic@isae-supaero.fr)
2: PACE Aerospace & IT GmbH, Berlin, Germany (anna.occhipinti@pace.de)
3: Empresarios Agroupados, Madrid, Spain (dsanchez@empre.es)

Abstract

This paper presents preliminary-design models of hybrid-electric propulsive system architectures in software PROOSIS™, and an example integration thereof into aeroplane mission sizing scheme in software Pacelab APD™. Firstly, an elaboration is provided on the development of hybrid-electric propulsive system architecture sizing/design capabilities. It relies on power-balance modelling that captures basic correlations between component power levels and power densities and efficiencies of the electrical machinery employed in the power train; the models handle steady-state operation alone. Subsequently, the paper explores integration of such models into aeroplane mission-sizing scheme based on direct information exchange between the two tools. An example trade study of parallel-hybrid performance system integrated in a short-medium range aeroplane model made accessible by such fully transparent coupled model is presented. The coupled framework is demonstrated as capable to provide trade-offs between whole aircraft mission performance and properties of the integrated hybrid system model. However, correct preliminary sizing of the propulsive system remains a challenge to be resolved. With subsequent rigorous validation and further development including comprehensive aeroplane-propulsive system information exchange, it will be capable to provide full fine-grained description of the design space, allowing robust concept comparison and decision making in conceptual design.

Introduction

With mounting pressure to deliver on the promise of more sustainable solutions for current and future aerial mobility, aircraft electrification persists in its theoretical potential to enable - if not more energy-efficient operation - then at least reduced in-operation emissions. While the current civil aeronautical industry mainly relies on hydrogen-powered concepts and “Sustainable Aviation Fuels” to enable this transition for the industry by 2050 [1], electrification remains to be of interest since any potential progress in electrical technology (higher energy densities in the first place) could quickly rekindle the interest and make it a viable candidate for replacing or supplanting fuel-based technologies. Moreover, currently widely explored hydrogen-based concepts synergise with electric systems through fuel cells. The latter remain viable candidates for non-propulsive onboard power provision, and/or for powering small aeroplanes and drones, making electricity constantly relevant for military applications [2] and potentially emergent markets such as Urban Air Mobility. [3]

The design space made accessible by the possibility to electrify onboard systems [4] - propulsive and non-propulsive alike - comes with a fundamental challenge for decision making in conceptual design. By virtue of delocalising various functions throughout the vehicle (e.g. distributing numerous small propulsors across the airframe) and toggling their operating modes to dynamically adapt them to various flight conditions - in isolation or in synergy with other subsystems - the designer ought to be equipped with methods that present full transparency of the overwhelmingly big number of resulting possibilities, which cannot be necessarily be captured by reduced or surrogate models derived from a conventionally very limited design space.

The present authors have made initial efforts to enable such transparency by means of direct coupling of aeroplane configuration and mission-sizing tool *Pacelab APD*™ with propulsive system architecture sizing and performance simulation tool *PROOSIS*™. [5] In parallel, preliminary efforts were made to create a preliminary design model for an Urban Air Mobility vehicle using the same vehicle-sizing tool, but by relying only on data tables previously exported by the propulsive system sizing tool. [3] This paper presents ongoing work that builds upon those previous efforts, aiming to demonstrate feasibility of a full software coupling for modelling vehicles powered by hybrid-electric systems. To that end, the objectives for the paper are the following:

1. Develop basic hybrid-electric propulsive system models in *PROOSIS* to capture the canonical hybrid-electric design space [6], and integrate those into the previous *Pacelab APD*-coupled sizing scheme.
2. Demonstrate feasibility of this coupling for full vehicle mission sizing on a dedicated case study and evaluate the behaviour of the coupled model.

1. Setup/Methodology

The framework is centred around commercial software *Pacelab APD™*, developed by *Pace GmbH* and dedicated to aircraft preliminary sizing and design [7], and *PROOSIS*™, developed by *Empresarios*

Agrupados Internacional and dedicated to preliminary sizing and performance simulation of various systems [8], in this particular context – the aircraft propulsive systems. The first successful direct coupling of the two parties was previously accomplished by leveraging UDP socket framework which provides informatic basis for the two tools to exchange information during runtime. [5] The users are thus able to manipulate the airframe configuration and mission profile in *Pacelab APD* and size the aircraft using a full-granularity propulsive system model developed in *PROOSIS*, called in off-design for any mission profile of interest. The preliminary case study was demonstrated for conventional tube-and-wing short-medium range mission with a turbofan engine model. Note that at this development stage, the *PROOSIS* system models still need to be pre-sized manually with *a priori* knowledge of the application case, so that the coupled aeroplane sizing calculations can converge properly. These details, along with a complete elaboration of the current state of this coupling framework can be found in the previous work by the authors. [5] The work presented in this paper aims to ascertain the feasibility of such coupling strategy in a somewhat broader design space representing conventional aeroplanes powered by hybrid-electric propulsive systems.

2. Design Space and The Case Study

The design space made possible by hybridisation/electrification is very extensive, its scope given by numerous system architectures, the different ways to configure them, as well as the possible mission specifications and operating profiles. This section describes succinctly the employed software capabilities, and the models developed for this purpose that allow to access the design space of interest.

1.1. Pacelab APD Aeroplane Library

Pacelab APD contains an extensive library of pre-configured/sized aircraft templates that can be used as starting points for deriving new concepts within the similar (mainly Tube&Wing) design space. The available models range between long-range civil aircraft, over medium- and short-range aeroplanes and all the way to the smaller propeller airplanes and military fighters and drones. The templates are mission-sized using mass-performance loop, with a wide variety of handbook methods (e.g. for weight or aerodynamics estimation) carefully tuned to the different templates/aeroplane models. The mission profile module allows the user to design any desirable flight profile for a configuration of interest and conversely to adapt the configuration details to match the mission profile. Replacement of the innate propulsive system scalable data tables with external detailed system architecture models (*PROOSIS*) is done with the objective to render the preliminary sizing loop more representative for purposes of integrated propulsive system design studies.

1.2. Developed Models in PROOSIS™

Conventional propulsive system modelling in

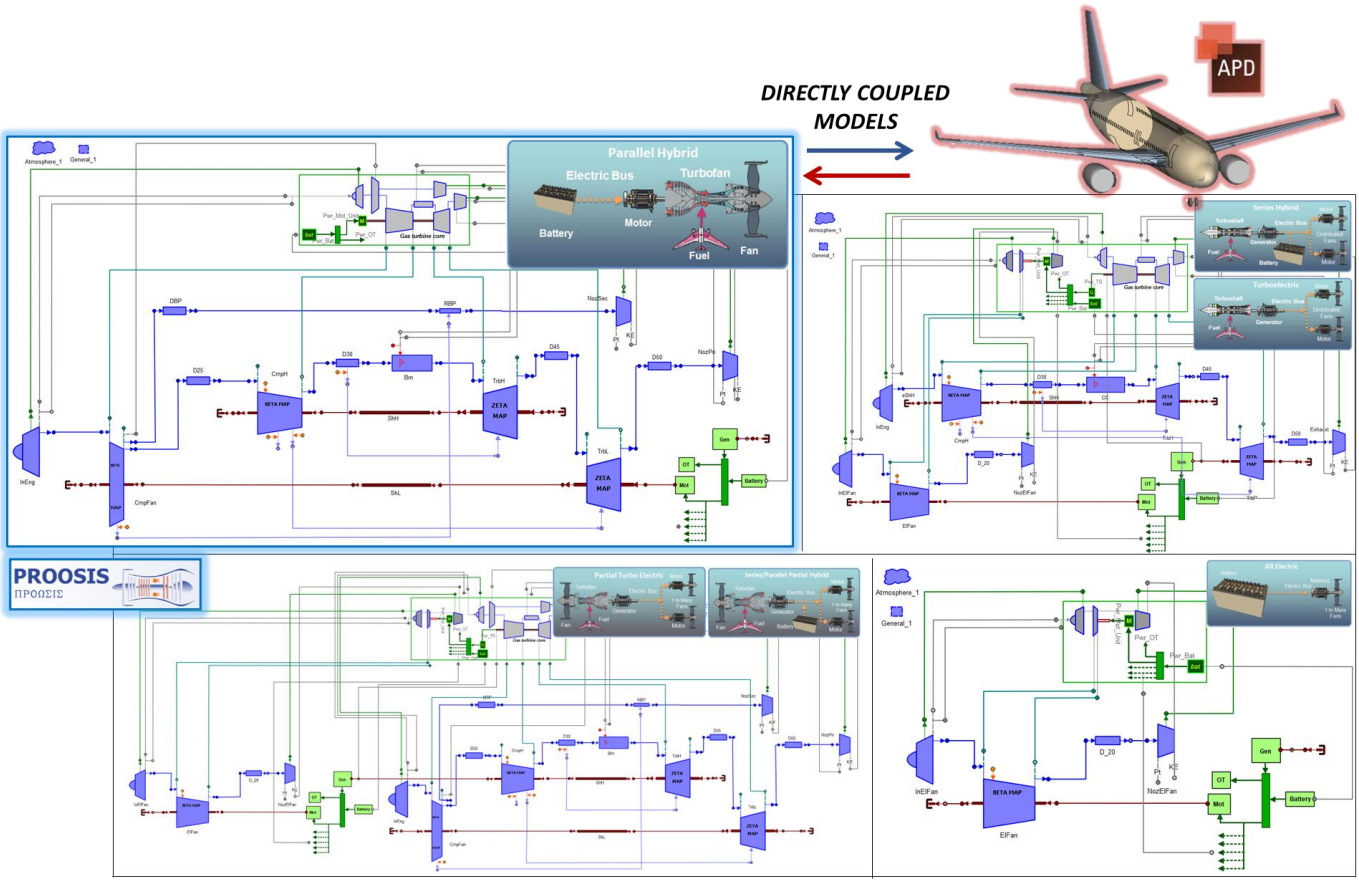

Fig.1: Hybrid-electric propulsive architecture models in *PROOSIS* developed to represent the canonical hybrid-electric architectures from [6]. The highlighted parallel-hybrid architecture is employed in the current coupled study.

PROOSIS relies on the standard *TURBO*™ library of components and functions which allow the user to model anything from basic turbojet- to turbofan-, turboprop- and turboshaft engines. For purposes of the current work, a simple custom library of transmission and source components is developed to allow the designer to capture basic tendencies and trades in steady-state modelling of hybrid-electric propulsive systems. The developed library is based on the canonical description of basic hybrid-electric architectures as outlined in the reference document by NASEM. [6] (Fig.1)

As the majority of the hybrid-electric solutions in steady-state operating mode rely in great part on gas-turbine cores and/or some form of propeller/fan-enabled jet propulsion, the *TURBO* library was extended to represent possible additional power sources and various efficiencies involved in the power train, since the goal is to capture the basic correlations which could be refined subsequently to the first demonstration of *Pacelab APD* coupling. In particular, two general-purpose components were developed to enable constructing any of the six canonical architectures:

- **Power transmission** (Fig.2, bottom): the main component, dedicated to calculation of the overall power balance of the system for an arbitrary number of propulsors and user-defined non-propulsive offtakes included in the loop. The component can be used in any canonical architecture model, thanks to switches integrated to adapt the power balance equation to the architecture of interest.
- **Power "Performance Monitor"** (Fig.2 top): dedicated to collecting the component-based properties, to in turn calculate the system-level performance (efficiencies, hybridisation ratios, etc.) based on standardised guidelines presented in [9]; different versions of the component were developed, adapted to different architecture types.

With these in hand, the designer is equipped to develop simple models of the canonical architectures with different hybridisation ratios or number of propulsors, and to size them at any operating condition of interest employing single- or multi-design-point sizing approach. The work is ongoing on final verification of the robustness of the sizing procedure for the entirety of the modelled hybrid-electric design space.

1.3. Sample Case Study and Test Matrix

The case study chosen for the demonstration in this paper is a parallel-hybrid engine architecture installed on a short-medium range Airbus *A320*-type aeroplane model. The decision was based on availability of a well-documented reference case (namely the in-house CFM56-type reference turbofan engine model [5]), as well as the relative simplicity of this type of hybrid architecture for first explorations of the theoretically very broad design space. The characteristics of the baseline aeroplane, its mission profile and the engine are generic short-medium

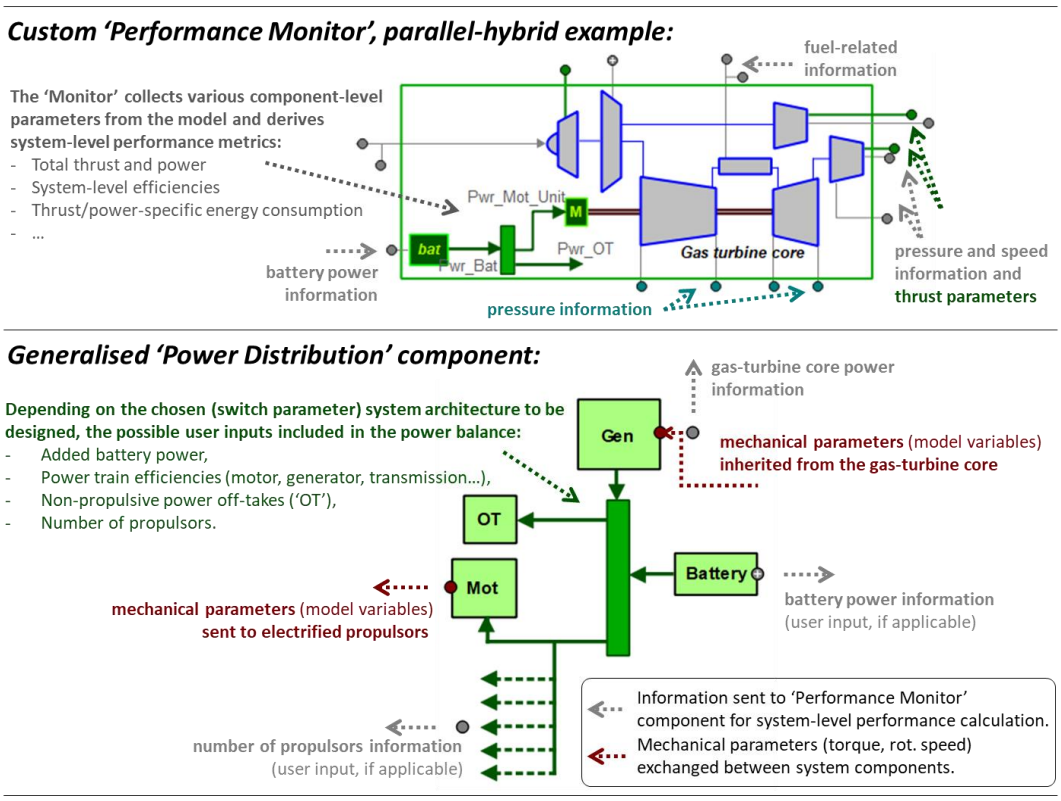

Fig.2: Overview of the custom components developed to complement the standard *TURBO* library. Bottom: 'Power Distribution' component calculating the power balance between various hybrid-electric architectures components or subsystems. Top: one of the customised 'Performance Monitor' components, which enables calculation and managment of system-level performance metrics.

range specifications, previously used and presented by the current authors in [5].

To illustrate the capability of the developed model to assess the solutions across the design space, the following elementary test matrix is described to sample the trade studies made possible by the coupled framework (Table 1):

A. Parallel-hybridising the baseline turbofan engine model in off-design, and performing trade studies to capture the aeroplane range response to such propulsive scenarios;
B. Re-designing the engine cycle to account for the hybridisation scenarios from *A.* and re-running the case studies.

A. OFF-DESIGN & B. CYCLE REDESIGN

case #		*1*	*2*	*3*	*4*	*5*	*6*
BatPwr	*takeoff*	0	200	400	600	800	1000
[kW]	*climb*	0	30	60	90	120	150
BatPwrDensity *[kW/kg]*		0,5	1	1,5	2	3	

Table 1: Sample test matrix given by the range of added battery power and battery power densities.

The hybridisation is carried out at take-off and climb phases of the mission profile only. For simplicity, the respective battery power additions were considered to be constant throughout the two respective phases. The range of values of the added power was chosen arbitrarily for purposes of this demonstration; it is assumed that power decreases linearly between the maximum addition at take-off and zero addition at cruise, which is why less power is added during climb than during take-off. In both case groups, the influence of battery power densities on the vehicle performance is explored by varying the battery power density parameter in *Pacelab APD* which, together with the maximum power rating of the battery (here represented by the power added at takeoff) calculates the added battery weight and includes in the overall weight breakdown of the vehicle.

3. Results and Discussion

This section presents the results obtained by coupling the *PROOSIS* parallel-hybrid engine model with *Pacelab APD* Airbus *A320* model. As an illustration, the aeroplane range (at fixed maximum take-off weight) is plotted as a response to the battery power added to the low-pressure (fan) shaft of the engine and an array of battery power densities. The plots are provided in Fig.3: the left part contains the off-design scenarios (group *A* described in the previous section), and the right part the associated re-designed scenarios (group *B*). Note that take-off power addition is plotted on the abscissa, with the power added at climb conforms to the distribution laid out in Table 1.

On the whole, the results show mainly monotonous tendency to penalise the range with increased added power with respect to the baseline 'clean' turbofan case. While qualitatively interesting (the observed tendency in itself is unsurprising given that the added power also adds extra weight to the aeroplane) the results seem to exhibit somewhat anomalous behaviour, discussed in the following.

The left part of Fig.3 presents the aeroplane response when power is added to the gas-turbine engine in off-design. While the hybridisation is penalising to the aeroplane performance throughout the studied domain, it is possible to ascertain the battery power densities at which the 'lost' baseline performance starts to get recovered - in the current case starting at 3 *kW/kg*. The somewhat counter-intuitive aspect of the obtained results is observed in the right-hand part of the plot.

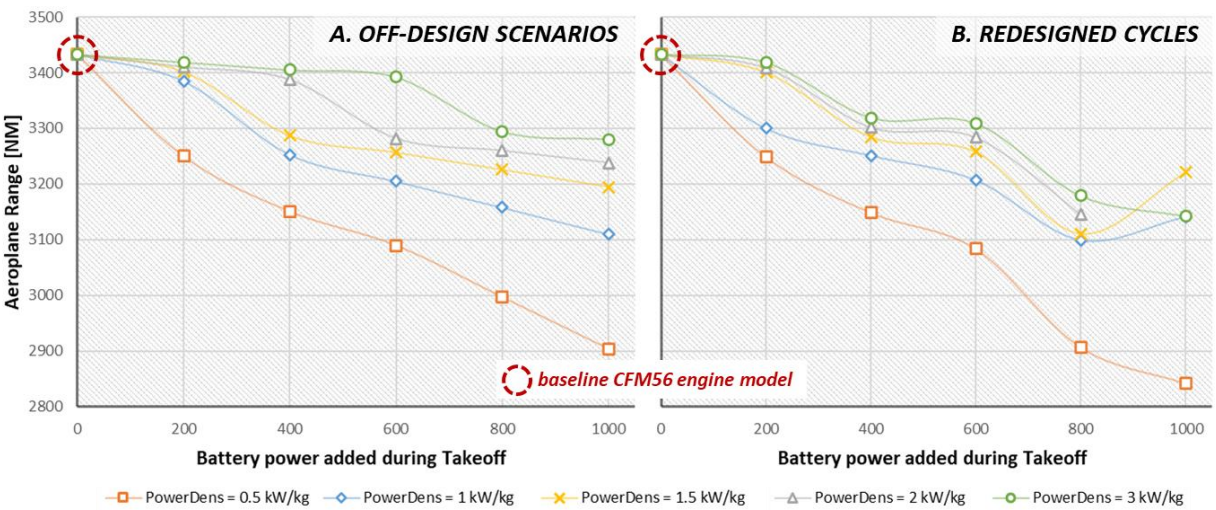

Fig.3: Sample trade study results obtained by the coupled framework. Left: aeroplane range response to the power added to the low-pressure (fan) spool at different battery power densities in off-design. Right: results of the same test matrix, where each point represents resized baseline engine cycle to account for the hybridisation.

In line with the logic previously employed by the authors in conventional turbofan coupled studies [5], the second case study group was proposed to be analogous to the initial off-design case studies. The underlying idea is to use those off-design conditions, and to feed them back into the propulsive system sizing cycle performed prior to the coupling. The goal of this 'internalisation' of the off-design conditions is to achieve more efficient propulsive system cycle, which should in turn result in better, i.e. less penalised, vehicle performance. As such, and in contrast to the previous plot - each vertical set of points of the right-hand side plot of Fig.3 (corresponding to a value of added power) represents a different design of the parallel-hybrid propulsive system model. However, notwithstanding the re-design effort, the results from this group of cases present quantitatively similar and even further degraded results with respect to the off-design cases.

The propulsive system cycle design is performed using the so-called multi-point sizing scheme. This sizing procedure differs from the conventional single-point cycle sizing in that the cycle requirements and constraints are distributed among the different design points of interest. For a conventional turbofan sizing, these points will be take-off, top of climb and cruise. While conceptually simple, the multi-point sizing is highly intricate in that the cycle requirements imposed at some design point are mutually dependent with some other cycle requirements imposed at other design points. This implies that a local improvement of a cycle parameter at a design point might provoke degradations at other design point, resulting in an overall performance penalty at the whole mission level. Therefore, simple inclusion of additional power at take-off and climb points of the existing multi-point sizing scheme, without adapting the rest of the cycle (efficiencies, mass flows, etc. across the operating envelope) seems to have resulted in overall degraded cycle behaviour with respect to the baseline ('clean')

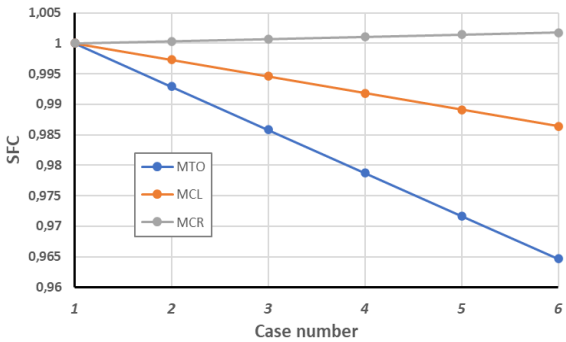

Fig.4: Relative change in specific fuel consumption at takeoff (MTO), climb (MCL) and cruise (MCR) as a consequence of the propulsive system resizing (case group *B* from Table 1).

engine cycle. As shown in Fig.4, power addition to the take-off (MTO) and climb (MCL) points as done in the re-design studies resulted in relative improvement of the overall efficiency and the specific fuel consumption (SFC) at those points. However, such local improvement without any other adaptations of the cycle resulted in an increased cruise (MCR) SFC, which will have a much bigger impact once the whole-mission aeroplane sizing is performed in *Pacelab APD*. This snowball effect into further mission-level penalties is seen in Fig.3, where most of the re-designed cycles ended up performing somewhat worse than the initial simple off-design cycles. Finally, it is underlined that the convergence of the last cases from group *B* (at 1 *MW* added power) is presumably not correct, especially given that the last point at 2 *kW/kg* power density did not reach convergence at all. (point missing from the plot)

While on the whole the results evolve monotonously, the irregularity of the observed trends could be attributed to the constant power being employed throughout the designated flight phases during the coupled mission sizing. Adding constant power at different operating points moves the propulsive system operating points into different zones of the turbomachinery performance maps, which could provoke inconsistent model response. Moreover, propulsion hybridisation concept is intended to employ variable electrical power throughout the flight profile, mainly to support the gas-turbine engine at certain operating scenarios (e.g. supported take-off and climb or fully-powered idle modes of approach and descent). The current state of the model coupling is not yet mature to account for such more refined power hybridisation evolutions.

Therefore, while the quantitative aspect of the presented results is not to be taken at the face value due to the incomplete accounting for all the hybridisation effects and to inadequacy of the employed operation and resizing strategies, insights are gained about how to go about the overall sizing strategies when endeavouring to couple hybrid-energy system models even at this early stage of the development. Even from the point of view of the propulsive system alone (i.e. without looking at the component power densities and the weight influence on the aeroplane mission performance), the hybrid-energy propulsive system sizing is necessarily a matter of the entire mission profile and not simply point-based performance improvement. Furthermore, this correlates to another crucial aspect not addressed in the current preliminary study – energy characteristics of the electrical components (battery in the first place), including the energy capacity and energy density in correlation to the power density currently used in isolation.

4. Conclusions

The paper presents ongoing work to model a comprehensive hybrid-electric propulsive system sizing/design space in *PROOSIS*™ and to subsequently couple these models with aircraft mission-sizing loops in *Pacelab APD*™. With simple extensions to the default gas-turbine component library, the developed *PROOSIS* models are capable to represent steady-state operation of six canonical (hybrid-)electric propulsive system architectures with arbitrary number of propulsors. The preliminary evaluation of the software coupling for this application is carried out by integrating the parallel-hybrid turbofan model with a conventional short-medium range aeroplane model.

The quantitative aspect of the obtained results is not representative due to the employed power hybridisation application and cycle resizing strategy proving to be inadequate. The capability of the framework to capture the necessary trade-offs between different hybrid-electric aircraft features, with full transparency of the propulsive system architecture, is nonetheless demonstrated. A gateway into the greater design space is therefore open in principle by this framework, and new insights could potentially be gained in the following. The significance of such development extends to possibility to model other onboard systems prone to electrification in *PROOSIS*, which can just as well be integrated with the existing models to assess the overall impact on the aircraft mission performance. By extension – what is not yet taken into account in the modelling framework – the in-operation environmental impact of various system architectures can be evaluated.

4.1 Further Developments

Aside from the refined variation of the power hybridisation and consolidation of the propulsive system cycle design scheme, future developments of the presented framework include developing the hybrid-electric system models for transient calculations to unlock the full potential of the developed framework and add to the representativity of the obtained results.

Furthermore, while the turbomachinery operating-line behaviour was surveyed throughout the study in order to ensure that no anomalies are produced – electrification impact on the turbomachinery operating lines was not quantitatively evaluated. Nonetheless, the current coupled framework enables inclusion of such information – notably the fan surge-margin safety – in the overall decision-making scheme, thus enabling the designer to make vehicle-level decisions based both on performance and the operability of the system.

Finally, inclusion of the entirety of the electrical component (motors, generators - depending on the architecture at hand) characteristics (energy, power densities) into the coupled sizing loop will enable more precise gauging/constraining of the calculated vehicle performance and together with improved sizing process should allow for capturing consistent tendencies, for the currently investigated architecture just as well as the others across the design space.

Acknowledgments

The authors wish to thank Raphaëlle Davy and Matthieu Foissac for the initial development of the hybrid-electric models in *PROOSIS*. Furthermore, gratitude is due to the anonymous reviewer for their valuable feedback on the initial extended abstract of the paper.

References

1 *Strategic Research and Innovation Agenda*, Clean Aviation Joint Undertaking, 2021.

2 Joksimović, A. et al., *Generalised Methodology for Sizing of Air Vehicles with Hybrid-Electric Propulsion*, AVT-RSY-323 Research Symposium on Hybrid/Electric Aero-Propulsion Systems for Military Aircraft, 2019.

3 Occhipinti, A. et al., *Urban Air Vehicle Mission Sizing and Performance Estimation Using Pacelab APD*™, AIAA SciTech Forum, 2024.

4 Brelje, B. J. and Martins. Joaquim R.R.A., *Electric, hybrid, and turboelectric fixed-wing aircraft: A review of concepts, models, and design approaches*, Progress in Aerospace Sciences, 2019, Vol.104, pp.1-19.

5 Joksimović, A. et al., *Direct Software Coupling for Aeroplane Sizing and Integrated Aeroplane-Engine Mission Performance Simulations*, AIAA SciTech Forum, 2024.

6 National Academies of Sciences, Engineering, and Medicine, *Commercial Aircraft Propulsion and Energy Systems Research: Reducing Global Carbon Emissions*, National Academies Press, ISBN 978-0-309-44096-7, 2016.

7 *Pacelab APD*, Pace GmbH/TXT e solutions, 2023, URL: https://pace.txtgroup.com/products/preliminary-design/pacelab-apd/, accessed on 15/09/2023.

8 *PROOSIS*, Empresarios Agrupados Internacional, 2023, URL: https://www.ecosimpro.com/products/proosis/, accessed on 15/09/2023.

9 Aircraft Electric Propulsion and Power (AEPP) Working Group, *Guidelines for Analysis of Hybrid Electric Aircraft System Studies: Nomenclature, Pictographic Representations, Standalone and Combined Properties and Attributes, Metrics, and Figures of Merit*, AIAA, 2019.